may 2011

New

KYOSHO
THE FINEST RADIO CONTROL MODELS

INFERNO VE
RACE SPEC

TEAM ORION

2.4GHz
Radio Control

readyset 4WD 1:8

INFERNO VE READYSET RACE SPEC
with Orion Vortex 8 B/L 2000Kv,
Orion Vortex Experience Amps
and KT201 2,4Ghz transmitter
#30876RS

KYOSHO
THE FINEST RADIO CONTROL MODELS

TEAM ORION

®KYOSHO UK
www.kyoshoeurope.com

INFERNO VE RACE SPEC OPTIONS

AKA14001MRW
1:8 BUGGY TYRES ON EVO RIMS I-BEAM MEDIUM (2)

AKA14002MRW
1:8 BUGGY TYRES ON EVO RIMS CITY BLOCK MEDIUM (2)

AKA14003MRW
1:8 BUGGY TYRES ON EVO RIMS GRID IRON MEDIUM (2)

AKA14004MRW
1:8 BUGGY TYRES ON EVO RIMS CROSS BRACE MEDIUM (2)

AKA14006MRW
1:8 BUGGY TYRES ON EVO RIMS ENDURO MEDIUM (2)

AKA14007MRW
1:8 BUGGY TYRES ON EVO RIMS IMPACT MEDIUM (2)

K.36218
DAMPERS PIT HOLDER w/MAGNET

K.36219
KNIFE EDGE REAMER KYOSHO (695101)

K.36261
STAINLESS POLYCARBONATE BODY SCISSORS - STRAIGHT

K.36262
STAINLESS POLYCARBONATE BODY SCISSORS - CURVED

K.80462
KYOSHO TOOL BOX

K.80471L
KYOSHO PIT GLOVES (L-SIZE/RED & BLACK)

K.80471M
KYOSHO PIT GLOVES (M-SIZE/RED & BLACK)

K.80821
KYOSHO BIG K PIT MAT (M-SIZE 600x400x3MM)

K.80822
KYOSHO BIG K PIT MAT (L-SIZE 1000x600x3MM)

K.87615
KYOSHO CARRYING BAG TOURING 1:8 L-SIZE

K.87823
KYOSHO PROPO BAG (340x260x150)

K.96162
RING GEAR GREASE

K.96501
DIFF.GEAR GREASE #1000

K.96625
SP BALL BEARING LIQUID

K.97044-15
PINION GEAR 15T - INFERNO VE

INFERNO VE RACE SPEC OPTIONS

K.97044-16
PINION GEAR 16T - INFERNO VE

K.97044-17
PINION GEAR 17T - INFERNO VE

K.97044-18
PINION GEAR 18T - INFERNO VE

K.97044-19
PINION GEAR 19T - INFERNO VE

K.97044-20
PINION GEAR 20T - INFERNO VE

K.BSW40
MULTI SPIKES TYRES ON MP7.5 SP WHEELS GUN METAL (4)

K.BSW40W
MULTI SPIKES TYRES ON MP7.5 SP WHEELS WHITE (4)

K.IF113BL
SUSPENSION PLATES INFERNO MP7.5 - BLUE

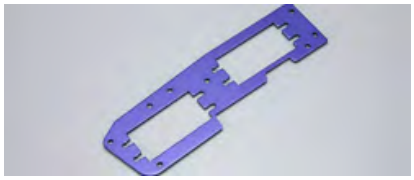

K.IF209
RADIO PLATE - INFERNO GT/L-MAX II (GT105/IF136BL)

K.IF213BL
NYLON WING (BLUE) - 1:8 BUGGY (BSW71BL)

K.IF213GM
NYLON WING (GUN METAL) - 1:8 BUGGY (BSW71G)

K.IF213KG
NYLON WING (FLUO GREEN) - 1:8 BUGGY (BSW71KG)

K.IF213KO
NYLON WING (FLUO ORANGE) - 1:8 BUGGY (BSW71KO)

K.IF213KR
NYLON WING (FLUO RED) - 1:8 BUGGY (BSW71KR)

K.IF213KY
NYLON WING (FLUO YELLOW) - 1:8 BUGGY (BSW71KY)

K.IF213W
NYLON WING (WHITE) - 1:8 BUGGY (BSW71W)

K.IF346-04
STEEL DAMPER BUSH (4 PCS) LONG TYPE

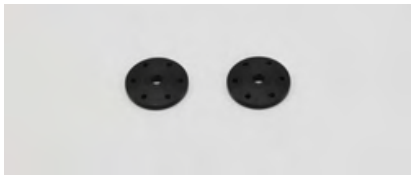

K.IF347-126
DAMPER PISTON 6X1.2MM (2) BIG SHOCK

K.IF347-128
DAMPER PISTON 8X1.2MM (2) BIG SHOCK

K.IF347-135
DAMPER PISTON 5X1.3MM (2) BIG SHOCK

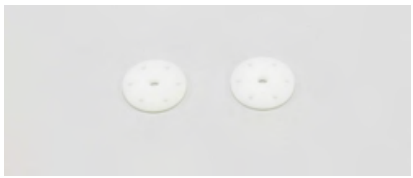

K.IF347-136
DAMPER PISTON 6X1.3MM (2) BIG SHOCK

INFERNO VE RACE SPEC OPTIONS

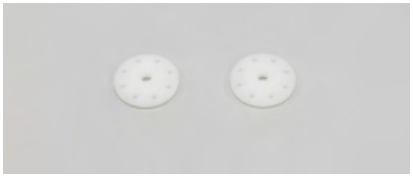

K.IF347-138
DAMPER PISTON 8X1.3MM (2) BIG SHOCK

K.IF347-145
DAMPER PISTON 5X1.4MM (2) BIG SHOCK

K.IF349
BIG SHOCKS (S) FRONT - MP777

K.IF350-1016
BIG SHOCK SPRINGS S 10-1.6/70MM WHITE (2)

K.IF350-714
BIG SHOCK SPRINGS S 9-1.4/70MM BLUE (2)

K.IF350-814
BIG SHOCK SPRINGS S 8-1.4/70MM GREEN (2)

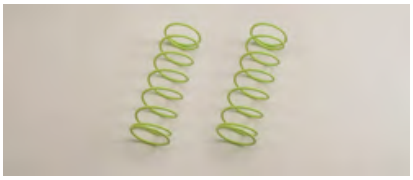

K.IF350-816
BIG SHOCK SPRINGS S 8-1.6/70MM LIGHT GREEN (2)

K.IF505-11
PINION GEAR 12T - INFERNO VE

K.IF505-12
PINION GEAR 12T - INFERNO VE

K.IF505-13
PINION GEAR 13T - INFERNO VE

K.IFTH002WMS
MULTI SPIKES TYRES ON INFERNO NEO WHITE WHEELS (4)

K.IFW113
METAL RADIO POSTS - INF MP7.5

K.IFW122
SPECIAL BRAKE DISC - MP7.5

K.IFW123
UPPER ARM TURNBUCKLE (FT) - MP7.5: 2PCS

K.IFW13
UNI DRIVE SHAFT CTR/ FRONT - MP5

K.IFW131
REAR SUS PLATE (2°) - MP7.5

K.IFW332
KNUCKLE ARM MACHINED ALU MP777/MP7.5

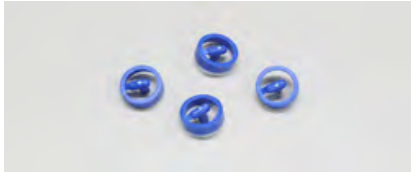

K.IFW332-01
BUSHINGS FOR IFW332 KNUCKLE

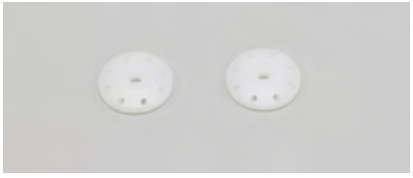

K.IFW405-128
SP TYPE DAMPER PISTON 8X1.2MM (2) BIG

K.IFW405-138
SP TYPE DAMPER PISTON 8X1.3MM (2) BIG

K.IFW45
REAR UNI CTR DRIVE SHAFT(L) -

INFERNO VE RACE SPEC OPTIONS

K.IFW7
WING STAY COLLAR (OPT.) - INF MP5

K.IS105
BIG SHOCKS (M) FRONT - STR

K.IS106-1116
BIG SHOCK SPRINGS M 10-1.6/84MM WHITE (2)

K.IS106-814
BIG SHOCK SPRINGS M 8-1.4/84MM LIGHT BLUE (2)

K.IS106-914
BIG SHOCK SPRINGS M 9-1.4/84MM DARK GREEN (2)

K.IS106-916
BIG SHOCK SPRINGS M 9-1.6/84MM LIGHT GREEN (2)

K.R246-8001
KYOSHO CARRYING BAG ROUTE 246

K.R246-8101
ROUTE246 SCREW DRIVER (CROSS-SHAPED/1.5MM)

K.R246-8104
R246 SCREW DRIVER (CROSS-SHAPED/3.0MM)

K.R246-8111
ROUTE246 SCREW DRIVER (FLAT/1.5MM)

K.R246-8122
ROUTE246 SCREW DRIVER (HEX/1.5MM)

K.SIL0400
SILICONE OIL 400 (40CC) WEIGHT

ORI14040
CARBON PRO 5000-90C (7.4V) LIPO BATTERY / DEANS

ORI14041
CARBON PRO 5500-90C (7.4V) LIPO BATTERY / DEANS

ORI14042
CARBON PRO 6500-90C (7.4V) LIPO BATTERY / DEANS

ORI28811
VORTEX BLS VORTEX MR8 1750KV 4 POLES

ORI28812
VORTEX BLS VORTEX MR8 1950KV 4 POLES

ORI28813
VORTEX BLS VORTEX MR8 2100KV 4 POLES

ORI30154
ADVANTAGE CHARGER IQ605 (6S/5A/50W)

ORI65104
VORTEX R8 BLS CONTROLLER - 130A/2-4S

ORI65105
VORTEX R8 PRO BLS CONTROLLER -

● 分解図 EXPLODED VIEW
EXPLOSIONSZEICHNUNG
VUE ECLATEE
DESPIECE

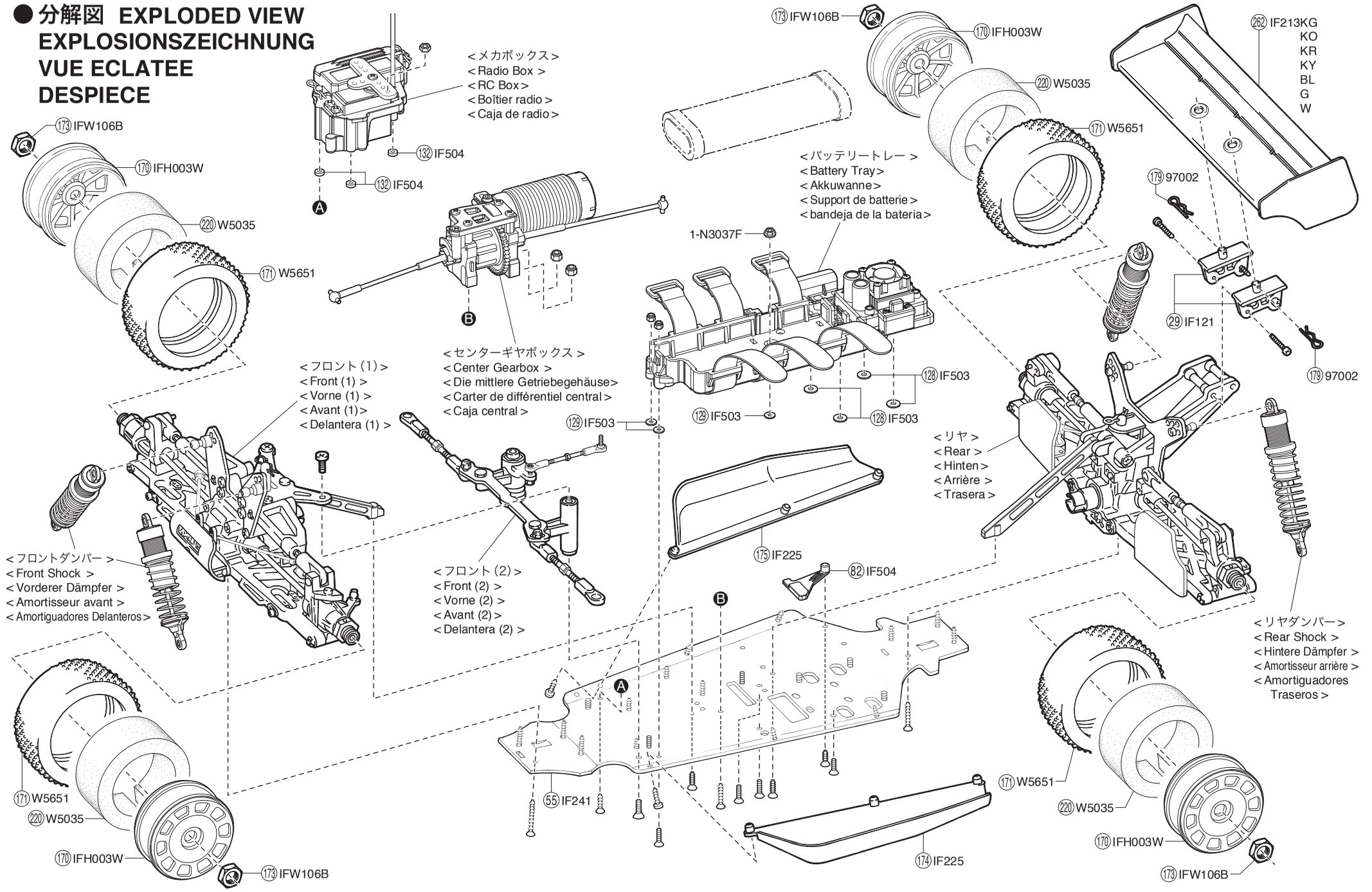

© Copyright 2011 KYOSHO CORPORATION / 禁無断転載複製

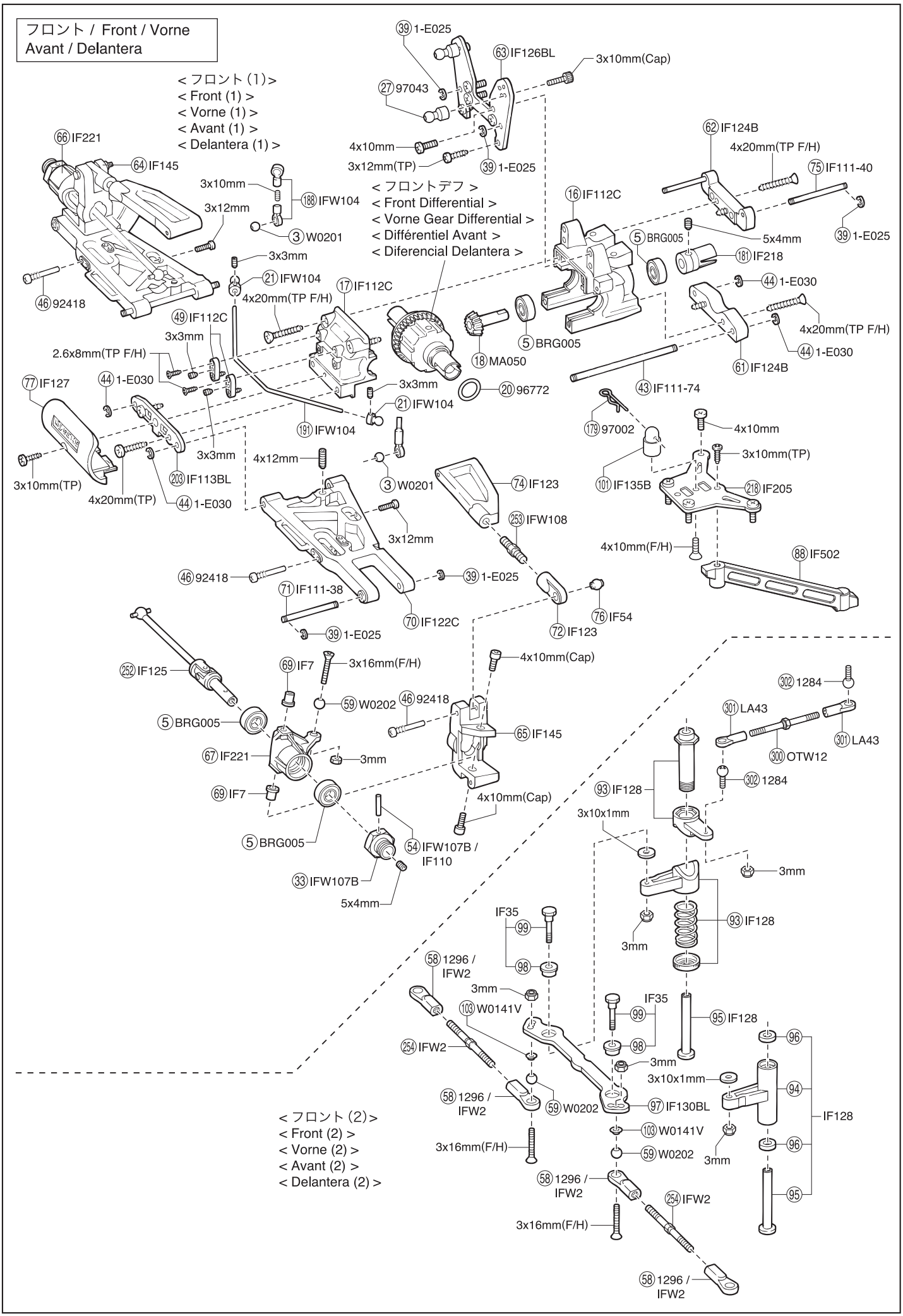
フロント / Front / Vorne
Avant / Delantera
< フロント (1)>
< Front (1) >
< Vorne (1) >
< Avant (1) >
< Delantera (1) >
< フロントデフ >
< Front Differential >
< Vorne Gear Differential >
< Différentiel Avant >
< Diferencial Delantera >
< フロント (2)>
< Front (2) >
< Vorne (2) >
< Avant (2) >
< Delantera (2) >
66 IF221
64 IF145
3x10mm
188 IFW104
3x12mm
3 W0201
3x3mm
21 IFW104
4x20mm(TP F/H)
46 92418
49 IF112C
3x3mm
2.6x8mm(TP F/H)
77 IF127
44 1-E030
3x10mm(TP)
4x20mm(TP)
203 IF113BL
44 1-E030
3x3mm
191 IFW104
4x12mm
3 W0201
3x12mm
46 92418
71 IF111-38
39 1-E025
70 IF122C
39 1-E025
74 IF123
253 IFW108
72 IF123
76 IF54
39 1-E025
63 IF126BL
3x10mm(Cap)
27 97043
4x10mm
3x12mm(TP)
39 1-E025
17 IF112C
18 MA050
5 BRG005
20 96772
3x3mm
21 IFW104
16 IF112C
5 BRG005
5x4mm
62 IF124B
4x20mm(TP F/H)
75 IF111-40
39 1-E025
181 IF218
44 1-E030
4x20mm(TP F/H)
44 1-E030
61 IF124B
43 IF111-74
179 97002
4x10mm
3x10mm(TP)
101 IF135B
218 IF205
4x10mm(F/H)
88 IF502
252 IF125
69 IF7
3x16mm(F/H)
59 W0202
46 92418
4x10mm(Cap)
65 IF145
5 BRG005
67 IF221
3mm
69 IF7
4x10mm(Cap)
5 BRG005
54 IFW107B / IF110
33 IFW107B
5x4mm
302 1284
301 LA43
300 OTW12
301 LA43
302 1284
93 IF128
3x10x1mm
3mm
93 IF128
3mm
IF35
99
98
58 1296 / IFW2
3mm
103 W0141V
IF35
99
95 IF128
254 IFW2
98
3mm
3x10x1mm
58 1296 / IFW2
59 W0202
97 IF130BL
96
94
IF128
103 W0141V
3x16mm(F/H)
59 W0202
3mm
96
58 1296 / IFW2
254 IFW2
95
3x16mm(F/H)
58 1296 / IFW2

バッテリートレー / Battery Tray / Akkuwanne
Support de batterie / Bandeja de la bateria

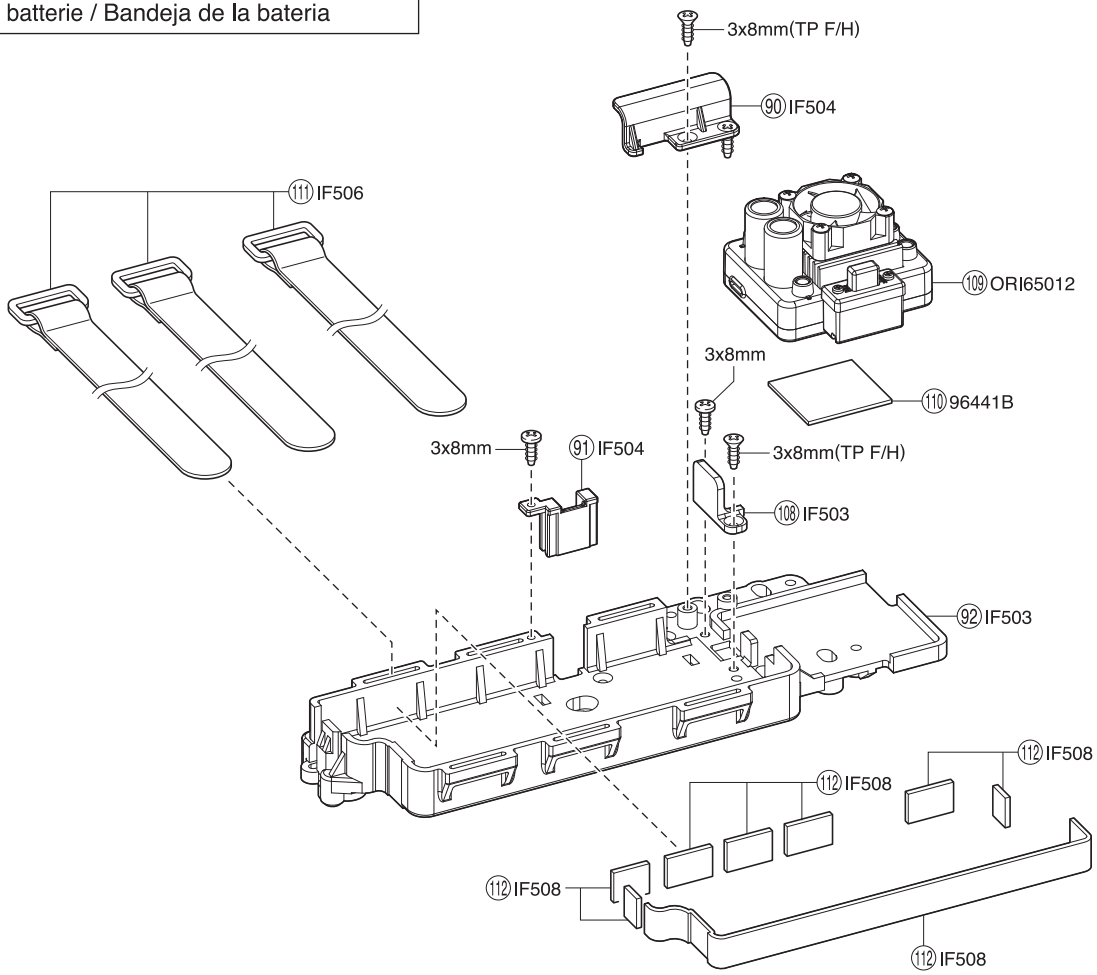

ラジオボックス / Radio Box / Empfängerbox
Boitier radio / Caja de radio

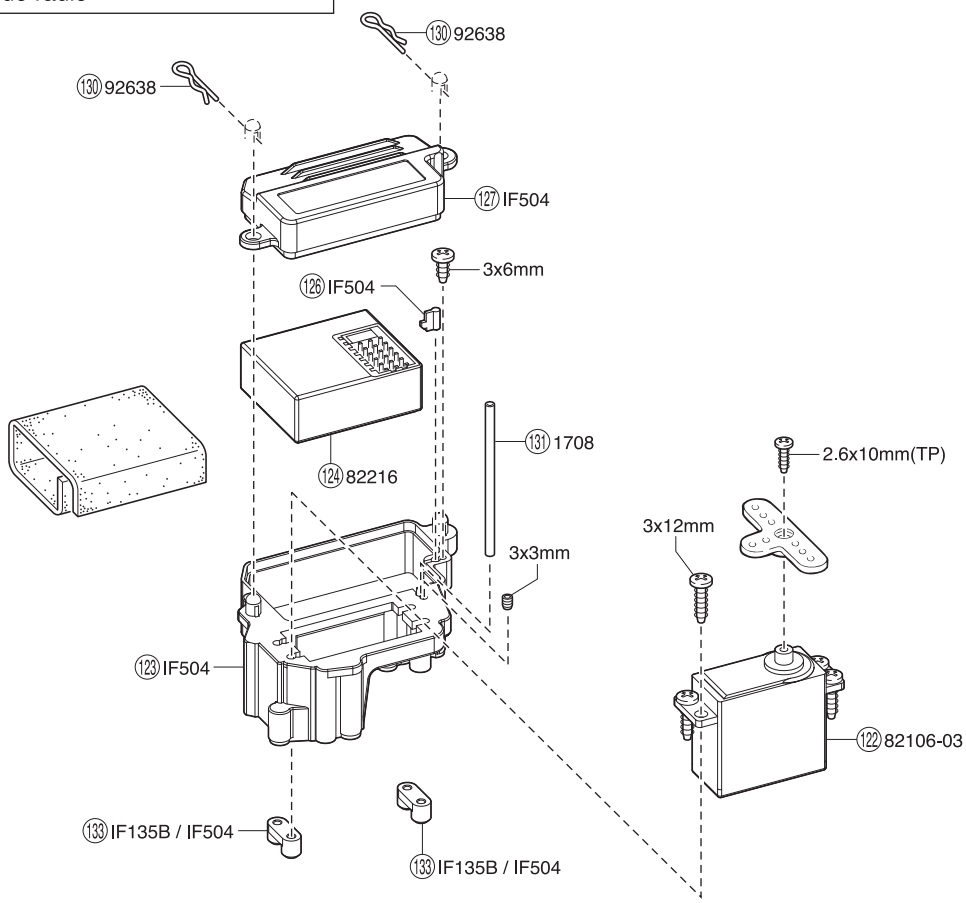

センターギヤボックス / Center Gearbox / Die mittlere Getriebegehäuse
Carter de différentiel central / Caja central

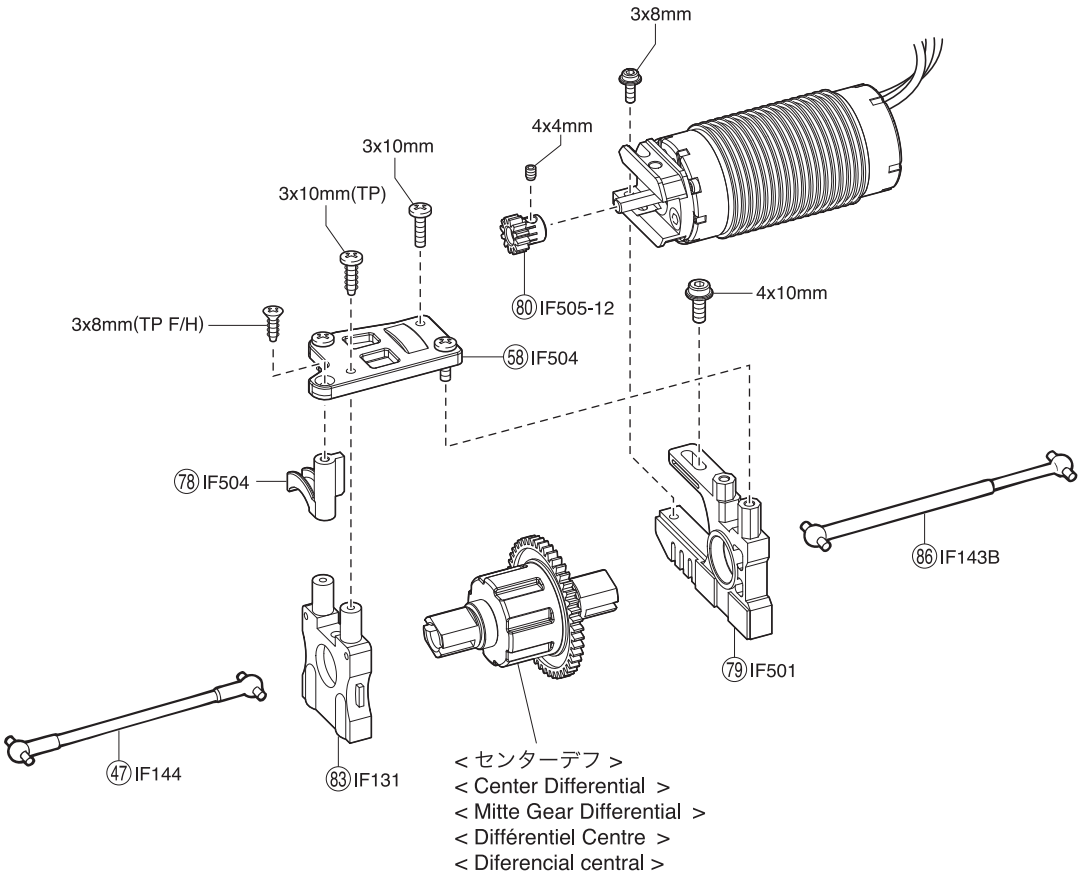

モーター / Motor / Motor
Moteur / Motor

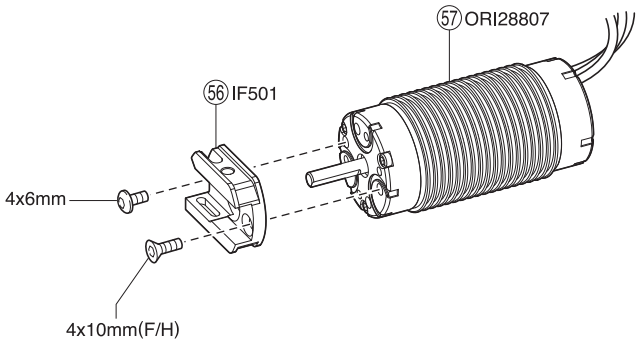

リヤ / Rear / Hinten
Arrière / Trasera

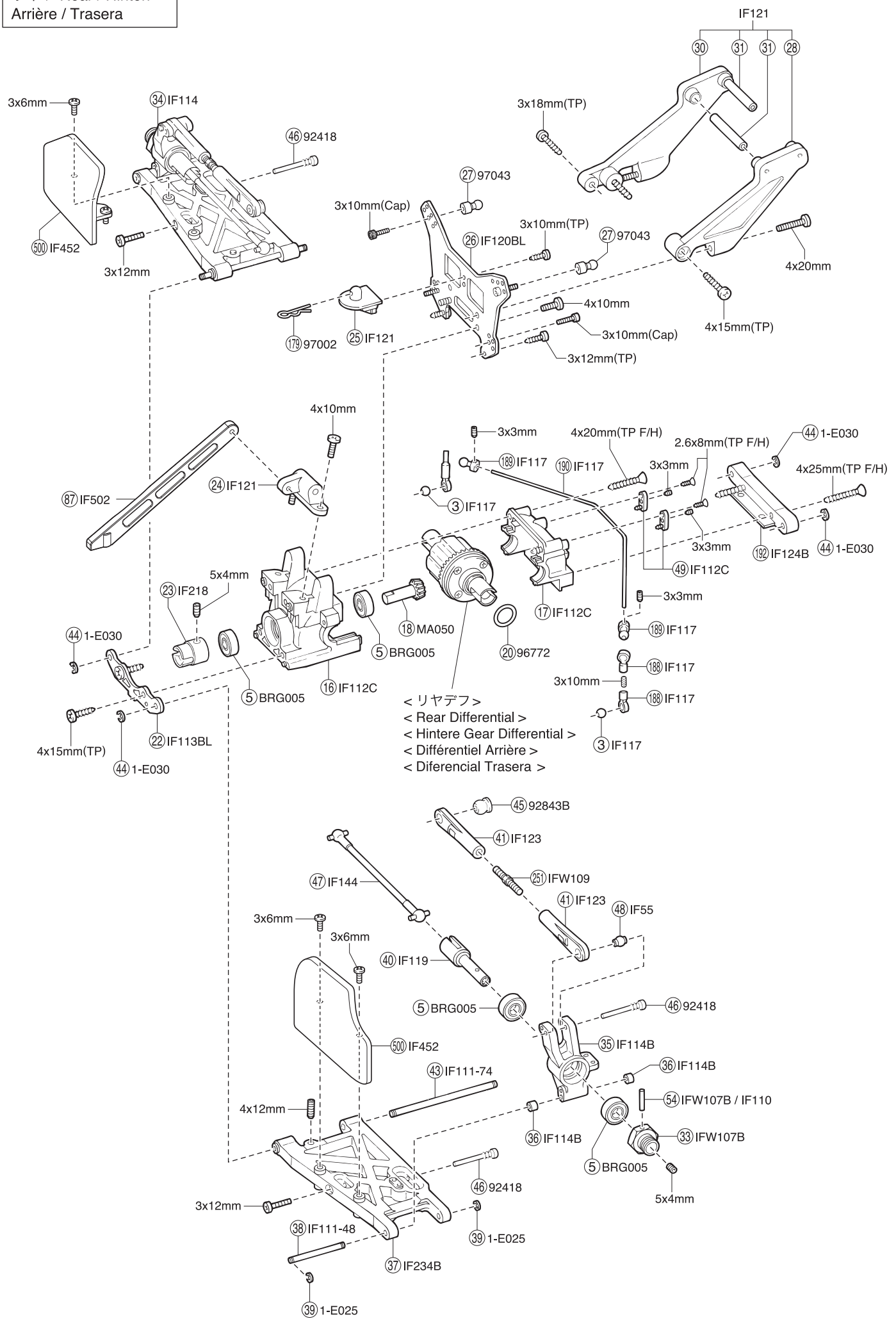

デフギヤ / Differential / Gear Differential
Différentiel / Diferencial

< フロント／リヤデフ >
< Front / Rear Differential >
< Vorne / Hintere Gear Differential >
< Différentiel Avant / Arrière >
< Diferencial Delantera / Trasera >

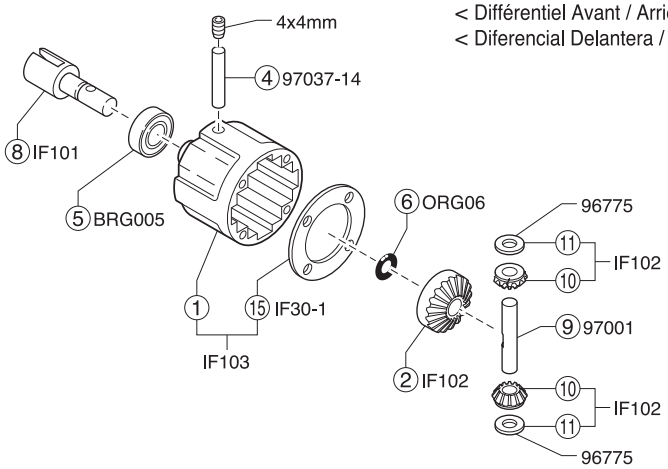

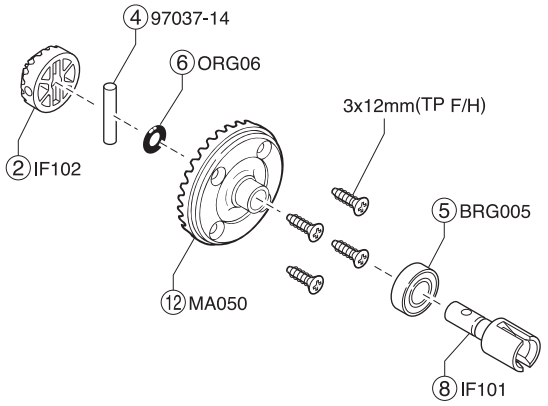

< センターデフ >
< Center Differential >
< Mitte Gear Differential >
< Différentiel Centre >
< Diferencial central >

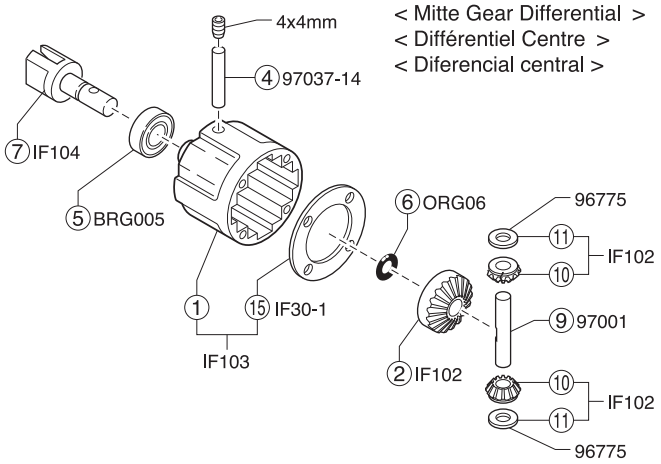

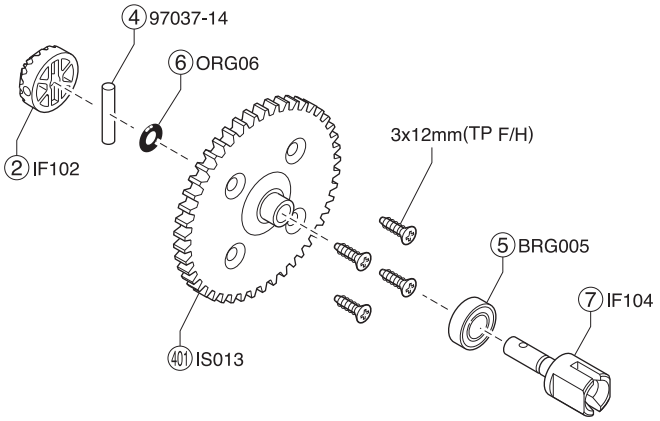

ダンパー / Shock Absorber / Stoßdämpfer
Amortisseur / Amortiguador

< フロントダンパー > IF232
< Front Shock >
< Vorderer Dämpfer >
< Amortisseur avant >
< Amortiguadores Delanteros >

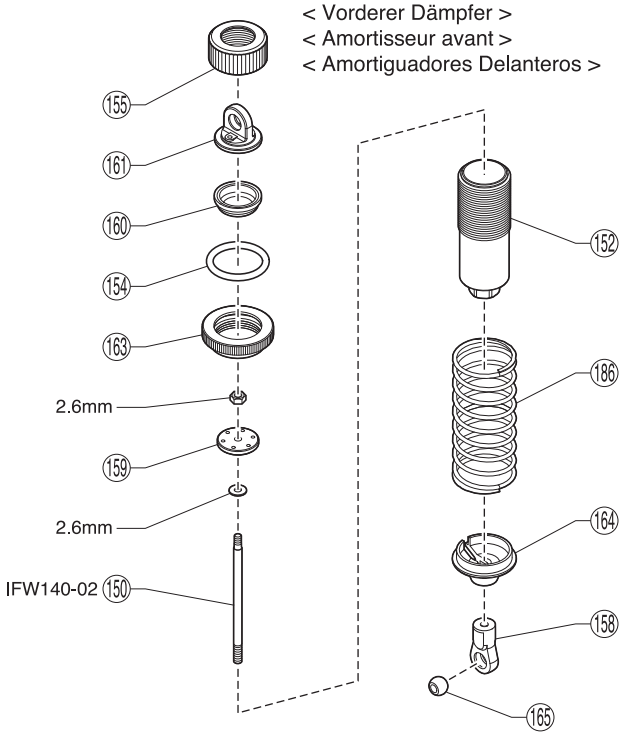
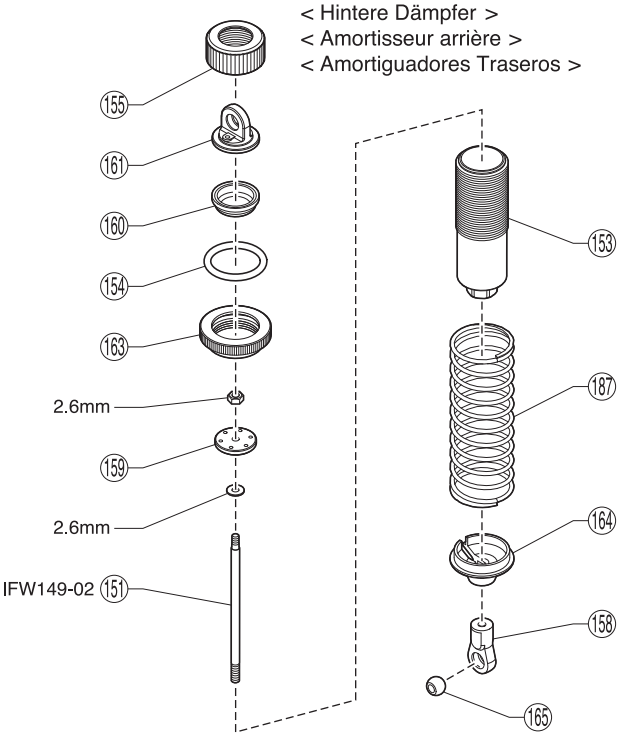
< リヤダンパー > MT113B
< Rear Shock >
< Hintere Dämpfer >
< Amortisseur arrière >
< Amortiguadores Traseros >